DELTANA

NEW PRODUCTS & OPTIONS

3

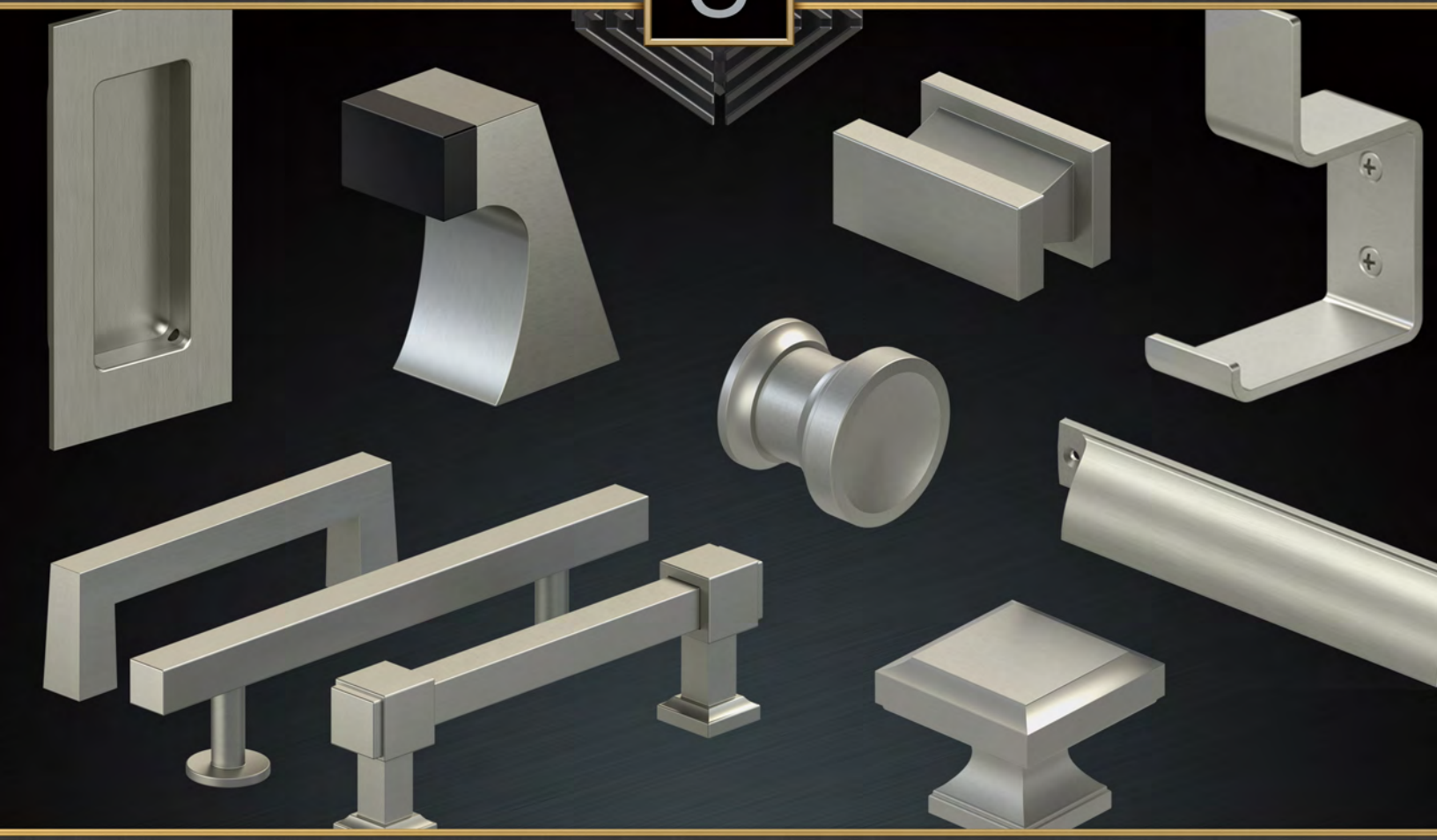

CATALOG ADD-ON BOOKLET

DELTANA continues to evolve and develop new products and finishes everyday. See what's new and exciting inside.

www.DELTANA.net

CONTENT

PAGE 1: HD 4″ RECTANGULAR FLUSH PULL
CATALOG: Section 7 - Knobs & Pulls

PAGE 2: 2-1/2″ CONTEMPORARY BUMPER
CATALOG: Section 5 - Bumpers & Stops

PAGE 3: 1-1/4″ CONTEMPORARY BUMPER
CATALOG: Section 5 - Bumpers & Stops

PAGE 4: 1″ DIAMETER DECORATIVE KNOB / CHALICE
CATALOG: Section 7 - Knobs & Pulls

PAGE 5: RECTANGULAR CONTEMPORARY KNOB / ANVIL
CATALOG: Section 7 - Knobs & Pulls

PAGE 6: 1-3/16″ SQUARE DECORATIVE KNOB
CATALOG: Section 7 - Knobs & Pulls

PAGE 7: 3-1/2″ & 8″ HD MODERN CABINET PULLS
CATALOG: Section 7 - Knobs & Pulls

PAGE 8: 4″ & 7″ MODERN CABINET PULLS / POMMEL
CATALOG: Section 7 - Knobs & Pulls

PAGE 9: 4″ & 7″ DECORATIVE CABINET PULLS / MANHATTAN
CATALOG: Section 7 - Knobs & Pulls

PAGE 10: 2-5/8″ HEAVY DUTY MODERN HOOK
CATALOG: Section 9 - Home Accessories

PAGE 11: 2-1/4″ MODERN RESIDENTIAL HOOK
CATALOG: Section 9 - Home Accessories

PAGE 12: 4″ & 7″ RECTANGULAR SHELL PULLS
CATALOG: Section 7 - Knobs & Pulls

Solid Brass

MODERN FLUSH PULL

4" RECTANGULAR

FP40 / LISTED EACH

FP40U3	US3	26.00
FP40U3-UNL	US3-UNL	26.00
FP40U4	US4	28.00
FP40U5	US5	28.00
FP40U10B	US10B	28.00
FP40U14	US14	28.00
FP40U15	US15	28.00
FP40U15A	US15A	28.00
FP40U19	US19	28.00
FP40U26	US26	28.00
FP40U26D	US26D	28.00
FP40CR003	CR003	30.00

MATERIAL: Solid Brass
LENGTH: 4"
WIDTH: 1-7/8"
MORTISE: 1-7/16"x 3-5/8"x 5/16"

Solid Brass

CONTEMPORARY BUMPER

2-1/2" FLOOR DOOR STOP

All new Deltana original, contemporary floor bumper that features a firm and modern design. It is available in 12 fine finishes.

MATERIAL: Solid Brass
HEIGHT: 2-1/2"
APPLICATION: Wood Ready
MOUNT: 17/64"(6mm) Pre-drill required.

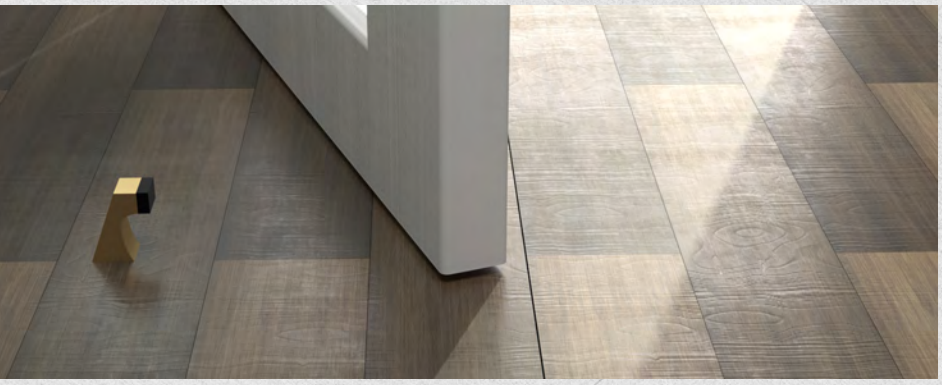

FDB250 / LISTED EACH

FDB250U3	US3	34.00
FDB250U3-UNL	US3-UNL	34.00
FDB250U4	US4	36.00
FDB250U5	US5	36.00
FDB250U10B	US10B	36.00
FDB250U14	US14	36.00
FDB250U15	US15	36.00
FDB250U15A	US15A	36.00
FDB250U19	US19	36.00
FDB250U26	US26	36.00
FDB250U26D	US26D	36.00
FDB250CR003	CR003	38.00

Solid Brass

CONTEMPORARY BUMPER

1-1/4" FLOOR DOOR BUMPER

All new Deltana original, contemporary floor bumper that features a compact design. It is available in 12 fine finishes.

MATERIAL: Solid Brass
HEIGHT: 1-1/4"
APPLICATIONS: Wood Ready
MOUNT: 3/32" (2.5mm) Pre-drill required.

FDB125 / LISTED EACH

FDB125U3	US3	12.00
FDB125U3-UNL	US3-UNL	12.00
FDB125U4	US4	14.00
FDB125U5	US5	14.00
FDB125U10B	US10B	14.00
FDB125U14	US14	14.00
FDB125U15	US15	14.00
FDB125U15A	US15A	14.00
FDB125U19	US19	14.00
FDB125U26	US26	14.00
FDB125U26D	US26D	14.00
FDB125CR003	CR003	16.00

Solid Brass

DECORATIVE KNOB

1" DIAMETER AND 7/8" PROJECTION

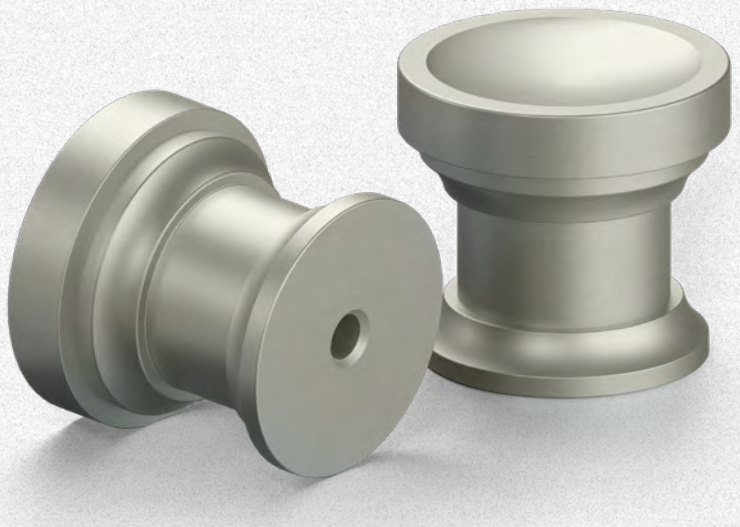

THE CHALICE

MATERIAL: Solid Brass
PROJECTION: 7/8"
DIAMETER: 1"

CHAL10 / LISTED EACH

CHAL10U4	US4	9.50
CHAL10U5	US5	9.50
CHAL10U10B	US10B	9.50
CHAL10U14	US14	9.50
CHAL10U15	US15	9.50
CHAL10U19	US19	9.50
CHAL10U26	US26	9.50
CHAL10U26D	US26D	9.50
CHAL10CR003	CR003	11.00

Solid Brass

CONTEMPORARY KNOB

7/8" PROJECTION / RECTANGULAR

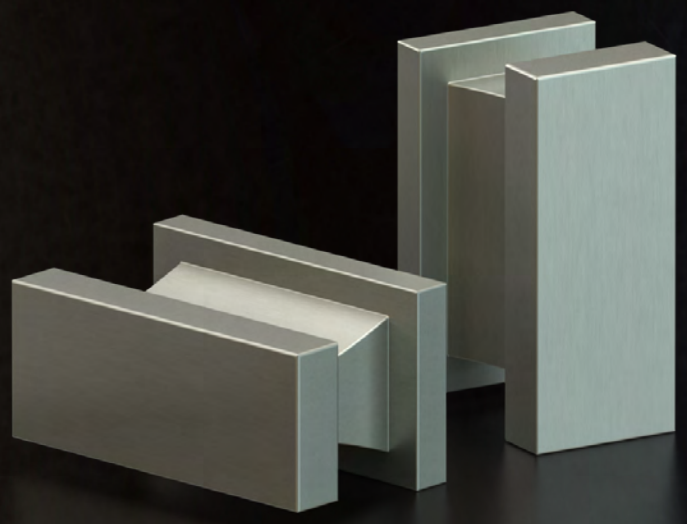

THE ANVIL

MATERIAL: Solid Brass
DIMENSIONS: 3/4"x 1-1/2"
PROJECTION: 7/8"
SPECIAL FEATURES: 2 Locator pins

AN138 / LISTED EACH

AN138U4	US4	10.00
AN138U5	US5	10.00
AN138U10B	US10B	10.00
AN138U14	US14	10.00
AN138U15	US15	10.00
AN138U19	US19	10.00
AN138U26	US26	10.00
AN138U26D	US26D	10.00
AN138CR003	CR003	11.50

Solid Brass

SQUARE DECORATIVE KNOB

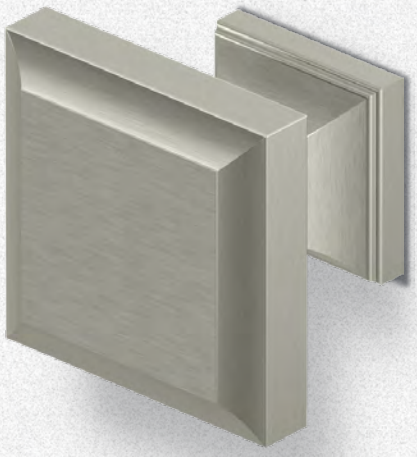

MATERIAL: Solid Brass
DIMENSIONS: 1-3/16"x1-3/16"
PROJECTION: 1"

KS10 / LISTED EACH

KS10U4	US4	11.50
KS10U5	US5	11.50
KS10U10B	US10B	11.50
KS10U14	US14	11.50
KS10U15	US15	11.50
KS10U19	US19	11.50
KS10U26	US26	11.50
KS10U26D	US26D	11.50
KS10CR003	CR003	12.50

Solid Brass

MODERN HD CABINET PULLS

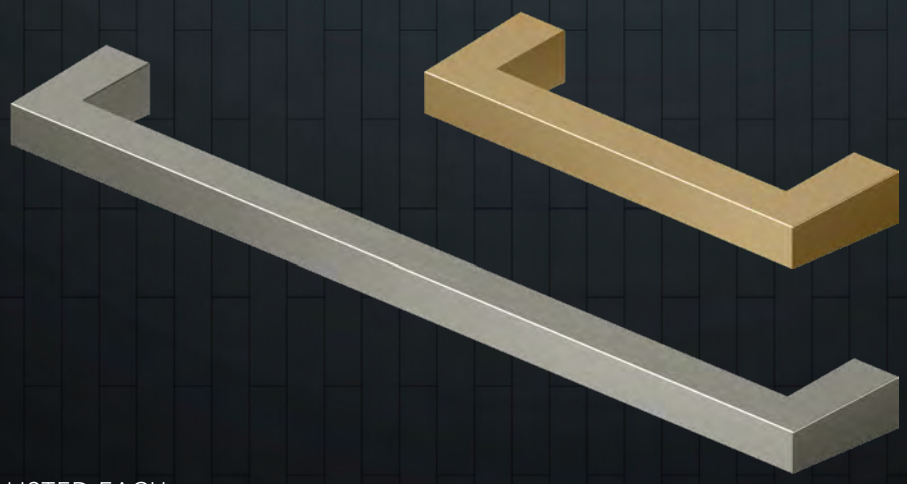

SBP35 & SBP80 / LISTED EACH

SBP35U4	US4	3-1/2″	16.00
SBP35U10B	US10B	3-1/2″	16.00
SBP35U14	US14	3-1/2″	16.00
SBP35U15	US15	3-1/2″	16.00
SBP35U19	US19	3-1/2″	16.00
SBP35U26	US26	3-1/2″	16.00
SBP80U4	US4	8″	26.00
SBP80U10B	US10B	8″	26.00
SBP80U14	US14	8″	26.00
SBP80U15	US15	8″	26.00
SBP80U19	US19	8″	26.00
SBP80U26	US26	8″	26.00

MATERIAL: Solid Brass
LENGTHS: 3-1/2″ & 8″
PROJECTION: 1-3/16″

Solid Brass

MODERN CABINET PULLS

THE POMMEL

MATERIAL: Solid Brass
LENGHTS: 4″ & 7″
PROJECTION: 1-5/16″
SPECIAL FEATURES: Posts screw into Pull

POM40 & POM70 / LISTED EACH

POM40U3-UNL	US3-UNL	4″	19.00
POM40U4	US4	4″	21.00
POM40U5	US5	4″	21.00
POM40U10B	US10B	4″	21.00
POM40U14	US14	4″	21.00
POM40U15	US15	4″	21.00
POM40U19	US19	4″	21.00
POM40U26	US26	4″	21.00
POM40U26D	US26D	4″	21.00
POM40CR003	CR003	4″	24.00
POM70U3-UNL	US3-UNL	7″	24.50
POM70U4	US4	7″	27.00
POM70U5	US5	7″	27.00
POM70U10B	US10B	7″	27.00
POM70U14	US14	7″	27.00
POM70U15	US15	7″	27.00
POM70U19	US19	7″	27.00
POM70U26	US26	7″	27.00
POM70U26D	US26D	7″	27.00
POM70CR003	CR003	7″	31.00

Solid Brass

DECORATIVE CABINET PULLS

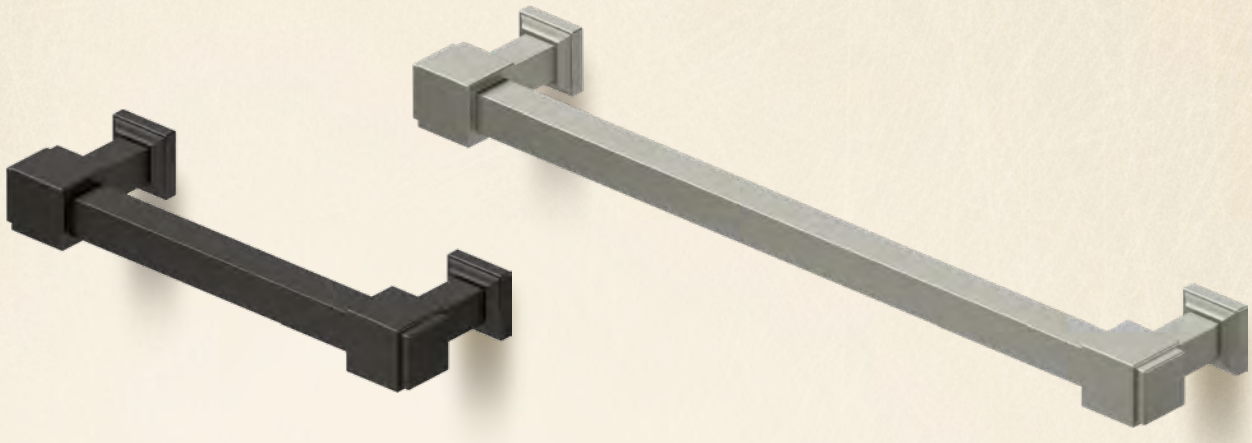

MANHATTAN

MATERIAL: Solid Brass
LENGTHS: 4″ & 7″
PROJECTION: 1-1/2″

MP40 & MP70 / LISTED EACH

MP40U3-UNL	US3-UNL	4″	27.00
MP40U4	US4	4″	29.00
MP40U5	US5	4″	29.00
MP40U10B	US10B	4″	29.00
MP40U14	US14	4″	29.00
MP40U15	US15	4″	29.00
MP40U19	US19	4″	29.00
MP40U26	US26	4″	29.00
MP40U26D	US26D	4″	29.00
MP40CR003	CR003	4″	32.00
MP70U3-UNL	US3-UNL	7″	34.00
MP70U4	US4	7″	36.00
MP70U5	US5	7″	36.00
MP70U10B	US10B	7″	36.00
MP70U14	US14	7″	36.00
MP70U15	US15	7″	36.00
MP70U19	US19	7″	36.00
MP70U26	US26	7″	36.00
MP70U26D	US26D	7″	36.00
MP70CR003	CR003	7″	38.00

Solid Brass

HEAVY DUTY MODERN HOOK

MH11 / LISTED EACH

MH11U3	US3	21.00
MH11U4	US4	23.00
MH11U5	US5	23.00
MH11U10B	US10B	23.00
MH11U14	US14	23.00
MH11U15	US15	23.00
MH11U19	US19	23.00
MH11U26	US26	23.00
MH11U26D	US26D	23.00

MATERIAL: Solid Brass
HEIGHT: 3-13/16"
PROJECTION: 2-5/8"

Solid Brass

MODERN RESIDENTIAL HOOK

MH12 / LISTED EACH

MH12U3	US3	19.00
MH12U4	US4	21.00
MH12U5	US5	21.00
MH12U10B	US10B	21.00
MH12U14	US14	21.00
MH12U15	US15	21.00
MH12U19	US19	21.00
MH12U26	US26	21.00
MH12U26D	US26D	21.00

MATERIAL: Solid Brass
PROJECTION: 2-1/4"
HEIGHT: 3-5/8"

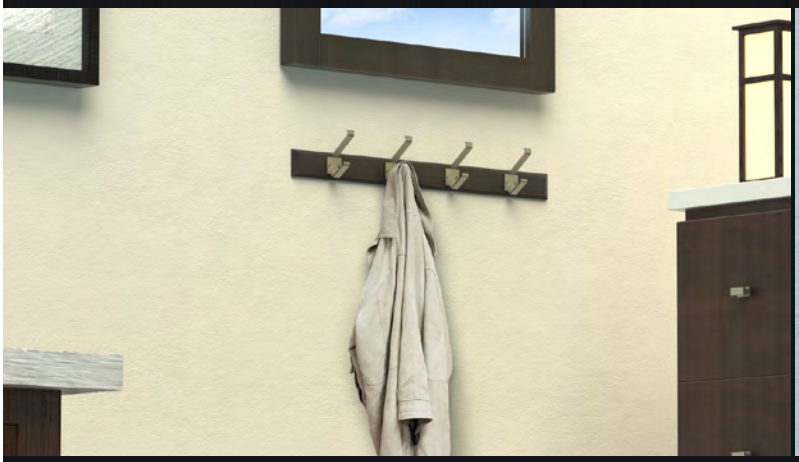

Solid Brass

RECTANGULAR SHELL PULLS

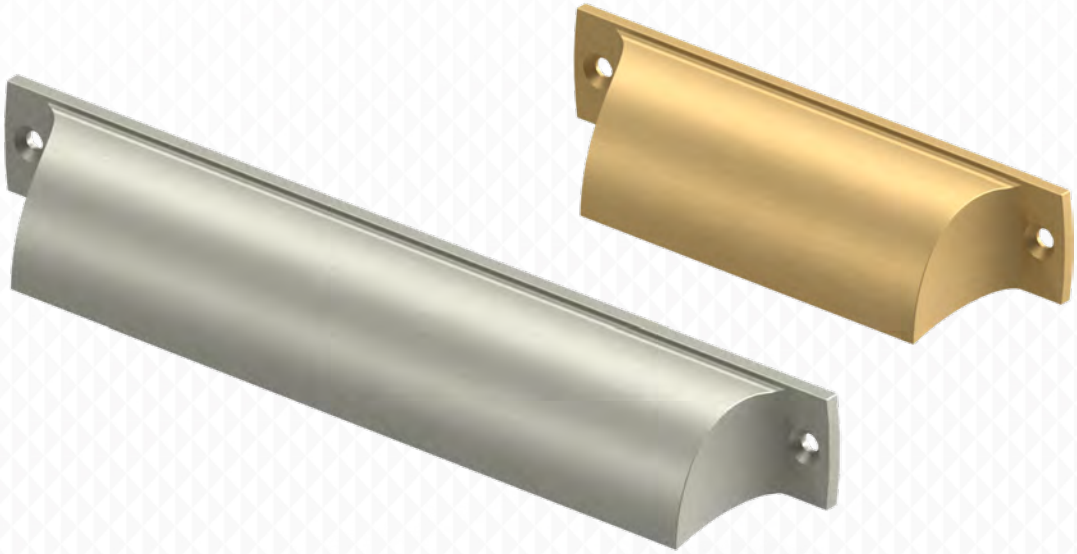

MATERIAL: Solid Brass
HEIGHT: 1-1/16″
LENGHTS: 4″ & 7″
PROJECTION: 15/16″

SHP40 & SHP70 / LISTED EACH

SHP40U3-UNL	US3-UNL	4″	17.00
SHP40U4	US4	4″	18.00
SHP40U5	US5	4″	18.00
SHP40U10B	US10B	4″	18.00
SHP40U14	US14	4″	18.00
SHP40U15	US15	4″	18.00
SHP40U19	US19	4″	18.00
SHP40U26	US26	4″	18.00
SHP40U26D	US26D	4″	18.00
SHP40CR003	CR003	4″	19.50
SHP70U3-UNL	US3-UNL	7″	22.00
SHP70U4	US4	7″	23.00
SHP70U5	US5	7″	23.00
SHP70U10B	US10B	7″	23.00
SHP70U14	US14	7″	23.00
SHP70U15	US15	7″	23.00
SHP70U19	US19	7″	23.00
SHP70U26	US26	7″	23.00
SHP70U26D	US26D	7″	23.00
SHP70CR003	CR003	7″	24.50

DELTANA

DISPLAY PROGRAM

EVOLVING ALONG OUR INVENTORY

FOR MORE INFORMATION VISIT

www.DELTANA.net

www.DELTANA.net