BOBRICK

Technical Data

Straight Grab Bar, Matte Black

150C.MBLK



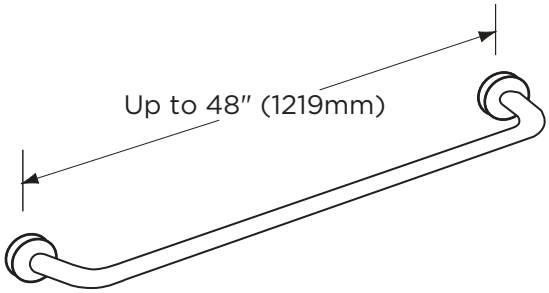

150 Series
1-1/2" (38mm) Diameter
Available Flanges:
C = concealed

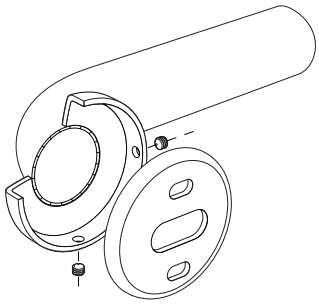

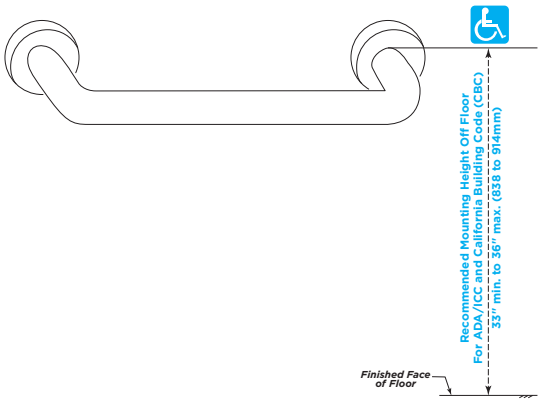

Standard 150C.MBLK Series Grab Bars	
Model No.	**Length**
150Cx18.MBLK	18" (457mm)
150CX24.MBLK	24" (610mm)
150CX36.MBLK	36" (914mm)
150CX42.MBLK	42" (1067mm)
150CX48.MBLK	48" (1219mm)

ADA/ICC/CBC Installation Guidance

Recommended Mounting Heights:

ADA/ICC/CBC: 33" min. to 36" (838 to 914mm) above finished floor (AFF)

MATERIALS:

Tubing - Fabricated of type 304 stainless steel. Exposed surfaces are powder-coated matte black.

Concealed Flange - 1/2" (13mm) deep, type 304 stainless steel, 3" (76mm) in diameter furnished with 3 stainless steel set screws and one back plate. Flanges and center posts are welded to tubing.

MOUNTING:

Clearance is distance between finished wall surface and inner edge of tubing. Standard clearance furnished is 1-1/2" (38mm). Required mounting height is 33" to 36" (838 to 914mm) from top of grab bar gripping surface to finish floor. 36" (914mm) horizontal grab bar should be installed on back wall and 42" (1067mm) horizontal grab bar installed on side wall or partition stall. Screws (not furnished).

Safety Warning: Grab bars are no stronger than the anchors and walls to which they are attached and, therefore, must be firmly secured in order to support the loads for which they are intended.

To avoid potential injury, the building owner or maintenance personnel should remove the grab bar from service if the grab bar is not adequately secured to wall or if there is any observed damage to the weld.

SPECIFICATIONS:

Grab bars have been designed and tested to withstand a downward pull when properly installed that exceeds HUD, HEW, FHA, VA, and other Federal, State, and local codes, including the Americans with Disabilities Act (ADA). Dimensions are measured from center-line to center-line of tubing, unless noted on grab bar application by circle dimensions which are from center-line of tubing to wall.

Straight Grab Bar, Matte Black shall be Model _____ (insert model number) of Bobrick Washroom Equipment, Inc., Clifton Park, New York; Jackson, Tennessee; Los Angeles, California; Bobrick Washroom Equipment Company, Scarborough, Ontario; Bobrick Washroom Equipment Pty. Ltd., Australia; and Bobrick Washroom Equipment Limited, United Kingdom.

The illustrations and descriptions herein are applicable to production as of the date of this Technical Data Sheet.
The manufacturer reserves the right to, and does from time to time, make changes and improvements in designs and dimensions.

Revised 9/8/26
© 2026 by Bobrick Washroom Equipment, Inc.