BOBRICK

Technical Data

Glass Mirror with Stainless Steel Angle Frame

B-290 SERIES



Specify Finish Required

☐ Satin Finish
☐ Matte Black Finish, add suffix ".MBLK" to model number, see table below.

Designer's Notes:

1. Special-order sizes available on request.
2. Maximum size one-piece angle-frame mirror, 144" x 52" (366 x 132cm); minimum size, 12" x 12" (30 x 30cm).
3. All Bobrick framed mirrors are manufactured to overall width and height dimensions. EXAMPLE: A 24" x 36" (61 x 91cm) mirror will be furnished 24" x 36" (61 x 91cm) outside-of-frame to outside-of-frame.
4. To specify special sizes use Series Number followed by width then height in inches. EXAMPLE: B-290 2024.
5. Bobrick framed mirrors are manufactured to a tolerance ± 1/8" (3.2mm).
6. For sufficient space to lift mirror onto wall hanger(s), provide 3-1/4" (85mm) for Snap Locking Design; 5-3/8" (137mm) for "2S" Tab Design minimum clearance above center line of mounting screw holes.
7. Provide 1" (25mm) minimum clearance at bottom of mirror for unlocking mirror from wall and 1/2" (12.7mm) clearance on each side.

Snap Locking Design (Rear View)

Figure: 1

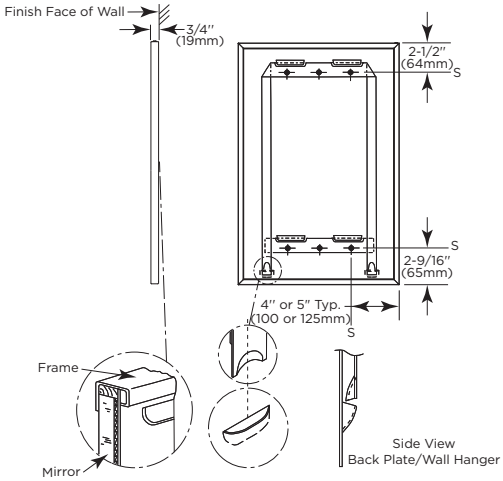

"2S" Tab Design (Rear View) - for all other mirrors up to a width of 36"

Figure: 2

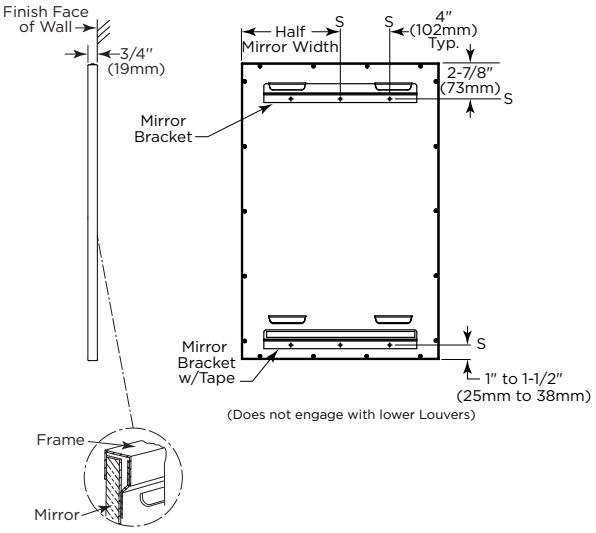

STANDARD B-290 SERIES MIRRORS

SATIN FINISH MODEL NO.	MATTE BLACK FINISH MODEL NO.	OVERALL SIZE W	OVERALL SIZE H
B-290 1830	B-290 1830.MBLK	18" (46cm)	30" (76cm)
B-290 1836	B-290 1836.MBLK	18" (46cm)	36" (91cm)
B-290 2430	B-290 2430.MBLK	24" (61cm)	30" (76cm)
B-290 2436	B-290 2436.MBLK	24" (61cm)	36" (91cm)
B-290 2448	B-290 2448.MBLK	24" (61cm)	48" (122cm)
B-290 2460	B-290 2460.MBLK	24" (61cm)	60" (152cm)
B-290 2472	B-290 2472.MBLK	24" (61cm)	72" (183cm)

Note: Mirrors greater than 36" in width will have multiple hanger brackets with a typical 8" off each edge.

MATERIALS:

Frame — Type-304, heavy-gauge stainless steel, 3/4" x 3/4" (19 x 19mm) angle with satin finish or matte black, as specified. One-piece, roll-formed construction forms continuous integral stiffener on all sides. Bevel design on front of angle holds frame tightly against mirror. Corners of mirror frame are heliarc welded, ground and polish smooth. Galvanized steel back is fastened to frame with concealed screws and equipped with integral horizontal hanging brackets near the top and bottom of the mirror for hanging the mirror and to prevent the mirror from pulling away from the wall.

Continued . . .

The illustrations and descriptions herein are applicable to production as of the date of this Technical Data Sheet.
The manufacturer reserves the right to, and does from time to time, make changes and improvements in designs and dimensions.

Revised 9/9/26 R/B
© 2026 by Bobrick Washroom Equipment, Inc.

Mirror — No. 1 quality, 1/4" (6mm) select float glass (standard glass): selected for silvering, electrolytically copper-plated by the galvanic process, and guaranteed for 15 years against silver spoilage. All edges protected by plastic filler strips; back is protected by full-size, shock-absorbing, water-resistant, nonabrasive, 3/16" (5mm) thick polyethylene padding.

Concealed Wall Hanger — For snap locking design: Heavy gauge steel construction. Incorporates upper and lower members, which engage backplate louvers to keep mirror against the wall. For "2S"-Tab design: Incorporates upper bracket engaging in upper louver and double sided tape below the bottom louver securing mirror to concealed wall hanger.

INSTALLATION:

Mount wall hanger on wall with screws (not furnished) at points indicated by an S. For plaster or dry wall construction, provide backing to comply with local building codes, then secure wall hanger with screws (not furnished). When providing a concealed backing, allow backing to cover range of mounting hole locations shown on drawing. For other wall surfaces, provide fiber plugs or expansion shields for use with screws (not furnished), or provide 1/8" (3mm) toggle bolts or expansion bolts.

Snap Locking Design: Hang mirror on wall hanger with all four backplate louvers engaged behind horizontal wall hanger members. To do this, mirror must be centered in front of the wall hanger horizontally, pressed flat against the wall approximately 1" (25mm) above final position and then lowered into final position.

"2S" Tab Design: Comprises of two brackets, while the bottom one is furnished with double side tape. Bottom hanger bracket's mounting holes must be 1" - 1 1/2" above mirror's bottom edge. Note: Bottom hanger bracket is not supposed to engage with louvers of mirror's backplate. Hang mirror on wall top hanger bracket with the top two louvers engaged behind top wall hanger bracket. To do this, mirror must be centered in front of the wall hanger horizontally, pressed only at the top against the wall approximately 1" (25mm) above final position an then lowered into final position. When lowering, pull mirror's bottom edge off the wall by preventing bottom bracket from engaging. Once lowered, mirror must be pressed against wall to engage with double sided tape of lower wall hangar bracket.

Snap Locking Design — Locking devices automatically secure mirror to concealed wall hanger when it is lowered into final position (see figure 3). Locking devices may be unlocked by inserting two flat blade screwdrivers behind each side of mirror near the bottom or under the bottom of the mirror and pulling mirror bottom forward and then up.

"2S" Tab Design — Double-sided tape secures mirror to concealed wall hanger by pressing mirror against double sided tape of lower hanger once it is lowered into final position (see figure 4).

Snap Locking Design
(Front View)

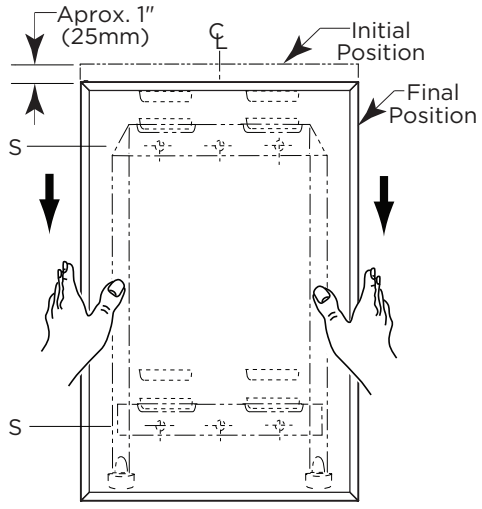

Figure: 3

"2S" Tab Design- Up to 36" Width
(Front View)

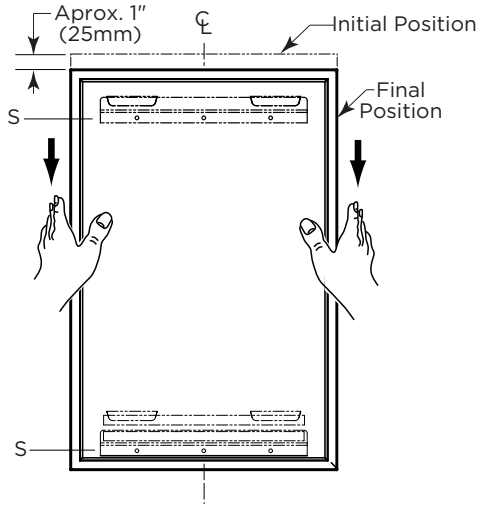

Figure: 4

SPECIFICATION:

Mirror shall have a one-piece, stainless steel angle frame, 3/4" x 3/4" (19 x 19mm) with continuous integral stiffener on all sides and beveled front to hold frame tightly against mirror; corners shall be heliarc welded, ground, and polished smooth; all exposed surfaces shall have satin finish or matte black, as specified. Reflective surfaces shall be guaranteed for 15 years against silver spoilage. All edges shall be protected by plastic filler strips and the back shall be protected by full-size, shock-absorbing, water-resistant, nonabrasive, 3/16" (5mm) thick polyethylene padding. Galvanized steel back shall have integral horizontal hanging brackets located at top and bottom for mounting on concealed wall hanger and to prevent the mirror from pulling away from the wall.

Framed Mirror shall be Model B-290 _____ (insert width and height) of Bobrick Washroom Equipment, Inc., Clifton Park, New York; Jackson, Tennessee; Los Angeles, California; Bobrick Washroom Equipment Company, Scarborough, Ontario; Bobrick Washroom Equipment Pty. Ltd., Australia; and Bobrick Washroom Equipment Limited, United Kingdom.

The illustrations and descriptions herein are applicable to production as of the date of this Technical Data Sheet.
The manufacturer reserves the right to, and does from time to time, make changes and improvements in designs and dimensions.

© 2026 by Bobrick Washroom Equipment, Inc.