Parts List

ECL-230X (-TB, -TD, -TDB)

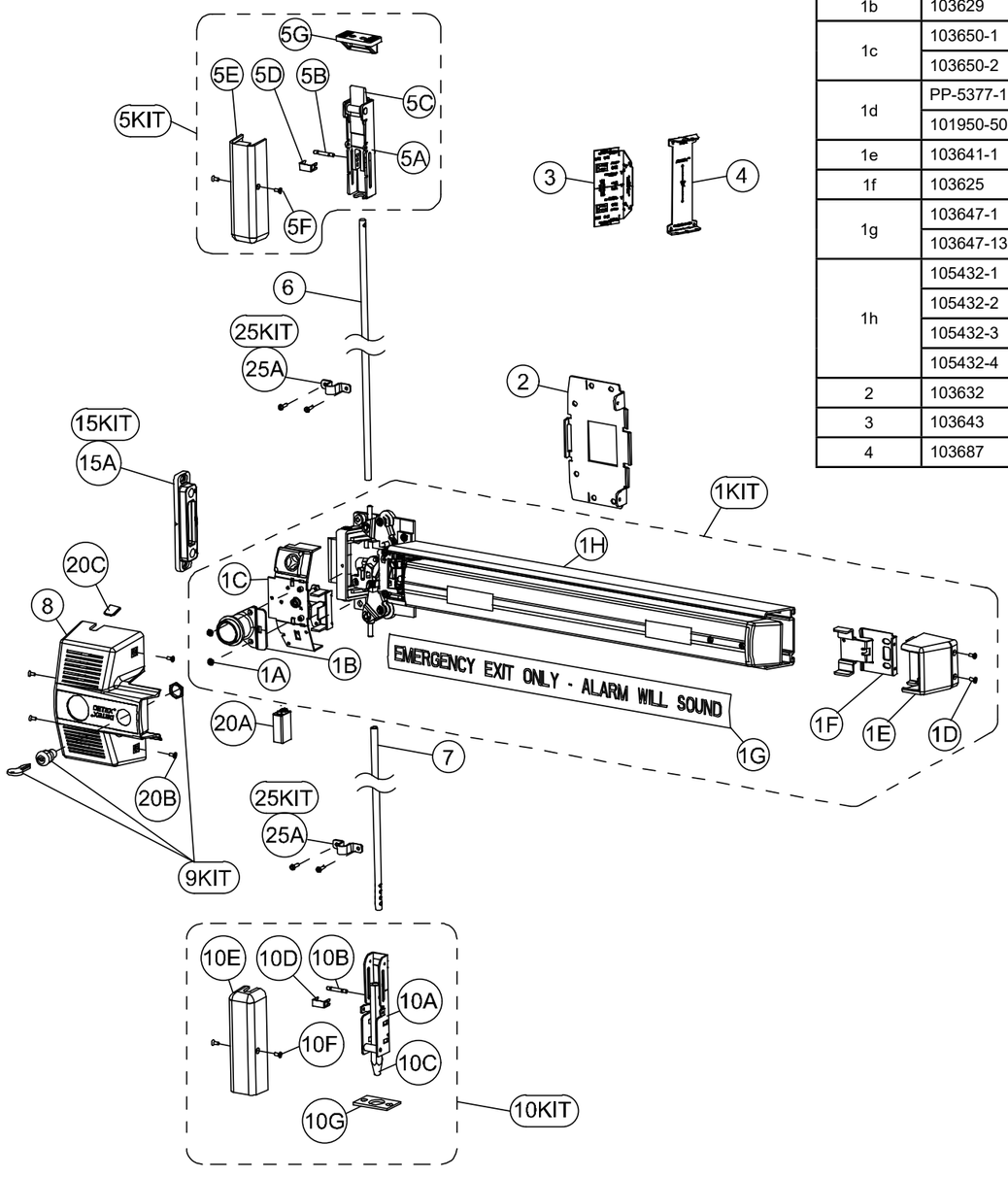

Item	Order Part #	Description	List Price
1KIT	105431-1	S&R ECL-230X core assy, single point	$1,007
	105431-2	S&R ECL-230X core assy, TDB, TD	$1,153
	105431-3	S&R ECL-230X core assy, H	$1,255
	105431-4	S&R ECL-230X core assy, TDB, H	$1,667
	105431-5	S&R ECL-230X core assy, 30" single point	$1,007
	105431-6	S&R ECL-230X core assy, 30" TDB	$1,064
1a	103699-104	Screw 8-32 x 1/4 cone	$1
1b	103629	IKC cylinder housing	$10
1c	103650-1	Siren bracket assy	$147
	103650-2	Siren bracket assy, weatherized	$208
1d	PP-5377-106	Screw, mach, 8-32 x 3/8" PFH	$1
	101950-505	Screw 8-32 x 5/16 FH, weatherized	$6
1e	103641-1	Endcap cover	$8
1f	103625	Endcap bracket	$12
1g	103647-1	Pushpad sign, 230X, english, red, std	$26
	103647-13	Pushpad sign, 230X, english, red, 30"	$19
1h	105432-1	S&R, ECL-230X Internal Pushpad Assy, single point	$807
	105432-2	S&R, ECL-230X Internal Pushpad Assy, TDB/TD	$870
	105432-3	S&R, ECL-230X Internal Pushpad Assy, H	$1,060
	105432-4	S&R, ECL-230X Internal Pushpad Assy, TDB/H	$1,466
2	103632	Backplate	$18
3	103643	Lockbody main template	$10
4	103687	Top and Bottom latch template	$4

Item	Order Part #	Description	List Price
5KIT	103693-1	Top bolt assy, standard	$222
	103693-2	Top bolt assy, weatherized	$222
5a	103691	Top bolt bracket	$58
5b	103533	Pin, Bottom Bolt	$7
5c	103639	Top bolt	$114
5d	103551	Bolt clip	$6
5e	103652-1	Cover, Bottom Latch	$13
5f	100156-104	Screw 8-32 x 1/4 FH	$1
	101950-505	Screw 8-32 x 5/16 FH, weatherized	$6
5g	103634	Top strike	$30
6	103674	Top rod (84")	$71
	103073-2	Top rod assy (96")	$281
	103073-3	Top rod assy (120")	$334
7	103544	Bottom rod	$53
8	105435-1	Cover assy, TDB/TD	$106
	105435-2	Cover assy, single point	$153
	105435-3	Cover assy, TDB/TD, weatherized	$125
	105435-4	Cover assy, single point, weatherized	$207
	105435-5	Cover assy, TDB/TD, hurricane	$125
	105435-6	Cover assy, single point, hurricane	$155
9KIT	PP-5572	Lockset with 2 keys (select key number 11 thru 20)	$17
9a	ECL-405	Key (select key number 11 thru 20)	$7
10KIT	103692-1	Bottom bolt assy	$137
	103692-2	Bottom bolt assy weatherized	$137
10a	103555	Bottom Bolt Bracket Subassembly	$63
10b	103533	Pin, Bottom Bolt	$7
10c	103536-1	Bottom bolt, HURRICANE	$46
10d	103551	Bolt clip	$6
10e	103652-1	Cover, Bottom Latch	$13
10f	100156-104	Screw 8-32 x 1/4 FH	$1
	101950-505	Screw 8-32 x 5/16 FH, weatherized	$6
10g	103546	Bottom strike plate	$19
15KIT	103660	Strike kit, standard	$61
	103660-1	Strike kit, high strength	$104
15a	103614	Strike	$62
20KIT	103640	Hardware kit, single point	$52
	103640-4	Hardware kit, three point std & hurricane	$58
	103640-6	Hardware kit, single point hurricane	$53
	103640-10	Hardware kit, single point, weatherized	$52
	103640-14	Hardware Kit, three point, weatherized	$75
20a	PP-5567	9V Battery	$12
20b	PP-5377-106	Screw, mach, 8-32 x 3/8" PFH	$1
20c	103645	Rod cover cap	$57
25KIT	104073-1	Rod Guide Kit (1 guide with hardware)	$57
	104073-2	Rod guide kit two	$15
	104073-3	Rod Guide Kit (3 guides with hardware)	$23
25a	103534	Rod guide	$12

Effective July 18, 2025
Modified November 11, 2025