SURFACE APPLIED CLOSER

850 SERIES
STANDARD

880 SERIES
ADJUSTABLE BACK-CHECK

UL LISTED

FINISHES
- AL - Aluminum
- DU - Storefront Bronze

5 YEAR WARRANTY



FEATURES

- Series 880 has adjustable Back-Check function controlled by a separate regulating valve, adjustable after installation.
- Underwriters' Laboratories Inc. Listed.
- Range of sizes:
  - **Standard:** 851, 852, 853, 854 and 855
  - **Back-Check:** 883, 884 and 885
- Two Adjustment Valves: Closing and Latching speeds controlled by separate regulating valves, adjustable after installation.
- . Non-handed for standard, top jamb or parallel arm installation.
- Available with regular, hold-open or fusible link hold open arms.
- Regular arms are equipped with a 15% (+)(-) 7½% power adjustment bracket.
- Hold-open arms are adjustable for holding from 90° to 180°.
- Rack and pinion mechanism contained in a high tensile precision cast aluminum housing assures the highest quality.
- Stable hydraulic door check fluid for any climatic operation and constant lubrication.
- Narrow design permits installation on most modern glass and aluminum doors without adaptors.



- 850 & 880 Series Closing and Latching Adjustment Valves

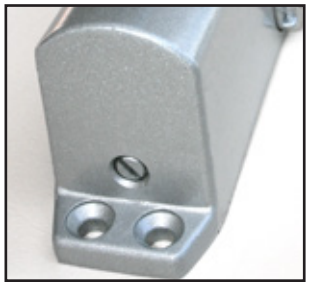

- 880 Series Back-Check Adjustment Valve

TECHNICAL DIMENSIONS

Size 1 Meets ADA Requirments

Description	Dimensions			
	1	2	3	4 & 5
A. Length of Closer Body	7 1/8"	8 1/16"	8 7/8"	9 3/4"
B. Horizontal Mounting Holes	6 1/2"	7 3/8"	8 3/16"	9 1/16"
C. Vertical Mounting Holes	3/4"	3/4"	3/4"	3/4"
D. Overall Height	4 1/16"	4 3/4"	4 3/4"	4 3/4"
E. Top of Door to Bottom of Closer	1 15/16"	2 1/4"	2 1/4"	2 1/4"
F. Closer Body Height	1 5/8"	1 3/4"	1 3/4"	1 3/4"
G. Projection from Door	2 9/16"	3"	3"	3"

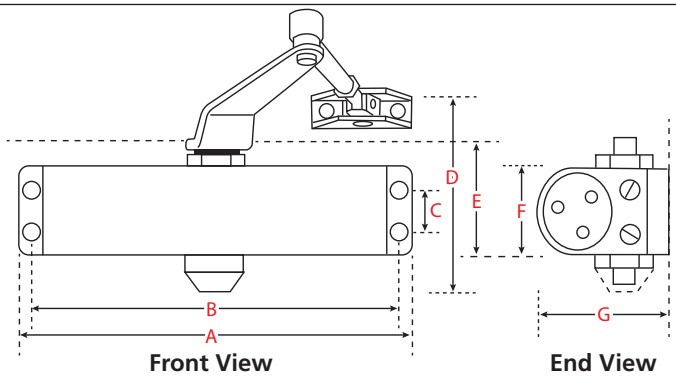

International Door Closers, Inc.
COPYRIGHT 2018 INTERNATIONAL DOOR CLOSERS, INC
West: 800-544-4422 • East: 800-225-6737
www.intldoorclosers.com

INSTALLATION TYPES

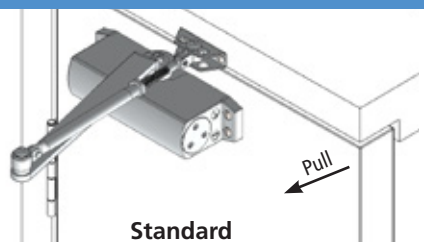

Standard

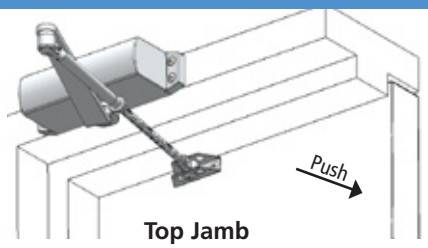

Top Jamb

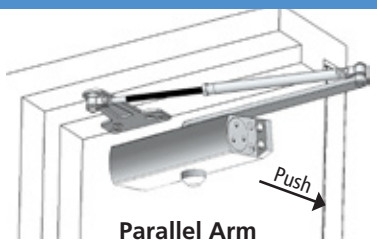

Parallel Arm

SELECTION CHART

INTERIOR DOOR SIZE	EXTERIOR DOOR SIZE		MODEL NUMBER		TYPE
	Swing Out	Swing In	Standard	Back-Check	
32″ 28″	28″ 24″	24″ —	851 851-P	— —	Regular Arm Parallel Arm
36″ 32″ 36″ 32″	32″ 28″ 32″ 28″	28″ 24″ 28″ 24″	852 852-P 1852 1852-P	— — — —	Regular Arm Parallel Arm Hold-Open Arm Parallel Hold-Open Arm
42″ 36″ 42″ 36″	36″ 32″ 36″ 32″	32″ 28″ 32″ 28″	853 853-P 1853 1853-P	883 883-P 1883 1883-P	Regular Arm Parallel Arm Hold-Open Arm Parallel Hold-Open Arm
48″ 42″ 48″ 42″	42″ 36″ 42″ 36″	36″ 32″ 36″ 32″	854 854-P 1854 1854-P	884 884-P 1884 1884-P	Regular Arm Parallel Arm Hold-Open Arm Parallel Hold-Open Arm
54″ 48″ 54″ 48″	48″ 42″ 48″ 42″	42″ 36″ 42″ 36″	855 855-P 1855 1855-P	885 885-P 1885 1885-P	Regular Arm Parallel Arm Hold-Open Arm Parallel Hold-Open Arm

PARTS AND ACCESSORIES - SERIES 850 & 880

Parts	Description	Size	1	2	3	4 & 5
	Main Arm	Part #	510	520	520	520
	Regular Forearm	Part #	511	521	521	521
	Hold-Open Forearm	Part #	None	522	522	522
	Parallel Bracket for Regular Arm	Part #	515	525	525	525
	Flat Drop Bracket	Part #	None	527	537	547
	Top Jamb Bracket	Part #	None	None	TJB-53	TJB-54
	Dress Cover	Part #	None	None	DC-8000	DC-8000
	Thru Bolt & Grommet Nut (Set of 4 each)	Part #	TBGN-50	TBGN-50	TBGN-50	TBGN-50

NOTE:
Doors of unusual height or weight, or doors subject to severe wind or draft conditions, or abusive usage, require the next larger model closer than the schedule.

SPECIFY:
Closer Model or Part Number

SPECIFY FINISH:
AL - Aluminum
DU - Storefront Bronze

COPYRIGHT 2018 INTERNATIONAL DOOR CLOSERS, INC