WP1XFU29



Color: Bronze

Weight: 6.6 lbs

Project:	**Type:**
Prepared By:	**Date:**

Driver Info

Type	Constant Current
120V	0.24A/0.17A/0.13A
208V	0.14A/0.10A/0.07A
240V	0.13A/0.09A/0.07A
277V	0.11A/0.08A/0.06A
Input Watts	15-29.7W

LED Info

Watts	29/20/15W
Color Temp	3000/4000/5000K
Color Accuracy	82-84 CRI
L70 Lifespan	100,000 Hours
Lumens	2,115-4,283 lm
Efficacy	135.3-148.3 lm/W

Technical Specifications

Field Adjustability

Field Adjustable:
Field Adjustable Light Output:
29W/20W/15W (factory default 29W)
Color temperature (selectable by 3000K, 4000K and 5000K)

Compliance

UL Listed:
Suitable for wet locations

IESNA LM-79 & LM-80 Testing:
RAB LED luminaires and LED components have been tested by an independent laboratory in accordance with IESNA LM-79 and LM-80.

IP Rating:
Ingress protection rating of IP65 for dust and water

Performance

Lifespan:
100,000-Hour LED lifespan based on IESlm-80 results and TM-21 calculations

Wattage Equivalency:
29W: 125W Metal Halide
20W: 100W Metal Halide
15W: 70W Metal Halide

LED Characteristics

LEDs:
Long-life, high-efficiency, surface-mount LEDs

Electrical

Driver:
29W: Constant Current, Class 1, 120-277V, 50/60 Hz, 120V: 0.24A, 208V: 0.14A, 240V: 0.13A, 277V: 0.11A
20W: Constant Current, Class 1, 120-277V, 50/60 Hz, 120V: 0.17A, 208V: 0.10A, 240V: 0.09A, 277V: 0.08A
15W: Constant Current, Class 1, 120-277V, 50/60 Hz, 120V: 0.13A, 208V: 0.07A, 240V: 0.07A, 277V: 0.06A

Dimming Driver:
Driver includes dimming control wiring for 0-10V dimming systems. Requires separate 0-10V DC dimming circuit. Dims down to 10%.

THD:
12.2% at 120V, 13% at 277V

Power Factor:
98.9% at 120V, 93% at 277V

Photocell:
120-277V selectable photocell that can be turned on and off.

Construction

Cold Weather Starting:
The minimum starting temperature is -40°F (-40°C)

Ambient Temperature :
Max Power Temp Rating: 122°F (50°C)
Middle Power Temp Rating: 53°C (128°F)
Low Power Temp Rating: 54°C (128°F)

Housing:
Die-cast aluminum

Lens:
Tempered glass

Finish:
Formulated for high durability and long-lasting color

Green Technology:
Mercury and UV free. RoHS-compliant components.

Installation

Mounting:
Wall mount

Copyright © 2026 RAB Lighting All Rights Reserved Note: Specifications are subject to change at any time without notice

Technical Specifications (continued)

Other

5-Year Limited Warranty:
The RAB 5-year, limited warranty covers light output, driver performance and paint finish. RAB's warranty is subject to all terms and conditions found at rablighting.com/warranty.

Dimensions

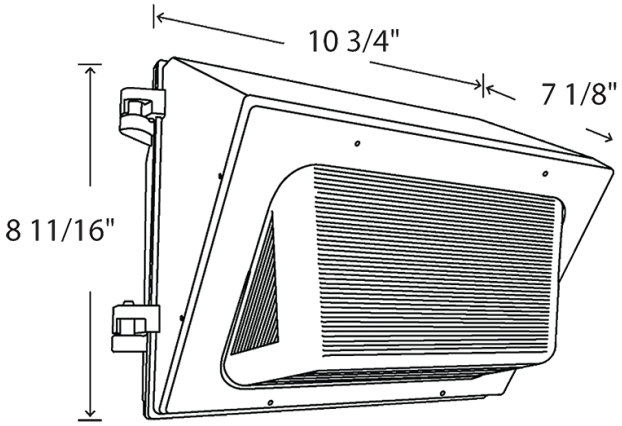

Features

- IP65 Rated
- 100,000-Hour LED lifespan
- 5-Year, limited warranty

Ordering Matrix

Family	Wattage	Color Temp	Finish	Driver	Options
WP1XFU	29				
	29 = 29/20/15W	**Blank =** 3000/4000/5000K	**Blank =** Bronze	**Blank =** 120-277V, 0-10V Dimming	**/LCBS/MVS =** Lightcloud Blue w/MVS Sensor **/LCBS =** Lightcloud Blue w/PIR Sensor **/LCB =** Lightcloud Blue **/LC =** Lightcloud **Blank =** Selectable Photocell

Copyright © 2026 RAB Lighting All Rights Reserved Note: Specifications are subject to change at any time without notice