LOLLI – model: PD-52008

dwelLED™ LED Pendants

WAC LIGHTING

Responsible Lighting®

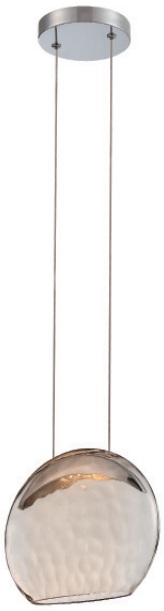

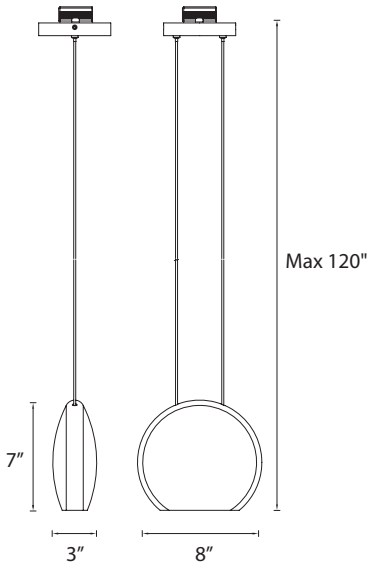

Fixture Type:

Catalog Number:

Project:

Location:

PRODUCT DESCRIPTION

An elegant distinctive look for LED technology. Mouth blown oval bronze glass with hammered optics tailored fit over a crescent die-cast LED housing that evokes beautiful patterns of ambient light like rays of sunshine on a fountain. Ideally placed in multiples at restaurants, hotel counters and kitchen islands.

FEATURES

- Unique oval bronze glass pendant with hammered optic
- Smooth and continuous ELV dimming
- Cable suspension carrying low voltage may be field shortened
- ETL & cETL damp location listed
- 2.95" x 1.89" x 1.14" universal voltage driver (120V-220V-277V) installs within a junction box
- 80,000 hour rated life
- Color Temp: 2700K
- 90 CRI
- Dimming: 100% - 10% ELV

SPECIFICATIONS

Construction: Aluminum with unique oval bronze glass pendant with hammered optic

ORDERING NUMBER

Model#	Watt	LED Lumens	Delivered Lumens	Finish	
PD-52008	*6.5W*	*284*	*165*	**CH**	*Chrome*

PD-52008 - ☐

Example: **PD-52008-CH**

waclighting.com
Phone (800) 526.2588
Fax (800) 526.2585

Headquarters/Eastern Distribution Center
44 Harbor Park Drive
Port Washington, NY 11050

Central Distribution Center
1600 Distribution Ct
Lithia Springs, GA 30122

Western Distribution Center
1750 Archibald Avenue
Ontario, CA 91760

WAC Lighting retains the right to modify the design of our products at any time as part of the company's continuous improvement program.